MATERIALS LIST	
QTY	DESCRIPTION
9	Stirrups Per Barrier
2	Bolt Down Bars Per Barrier
6	U–Bars Per Barrier
4	Deflection Limiters Per Barrier
2	JJ HOOKs Assembly Per Barrier
6	Horizontal Bars

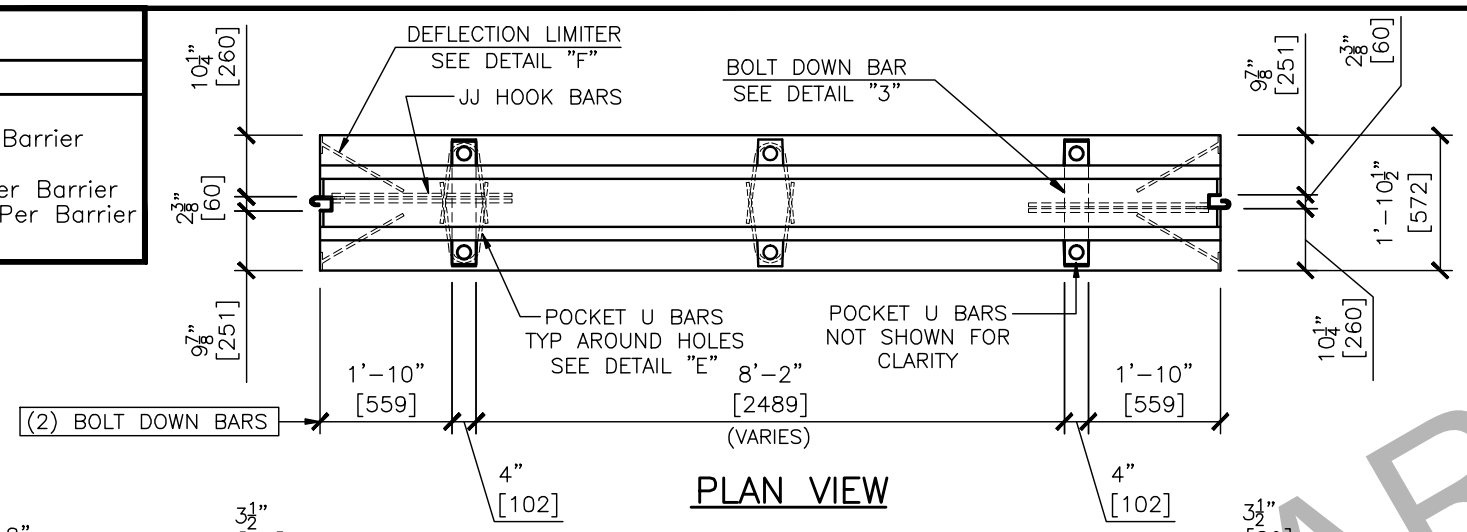

PLAN VIEW

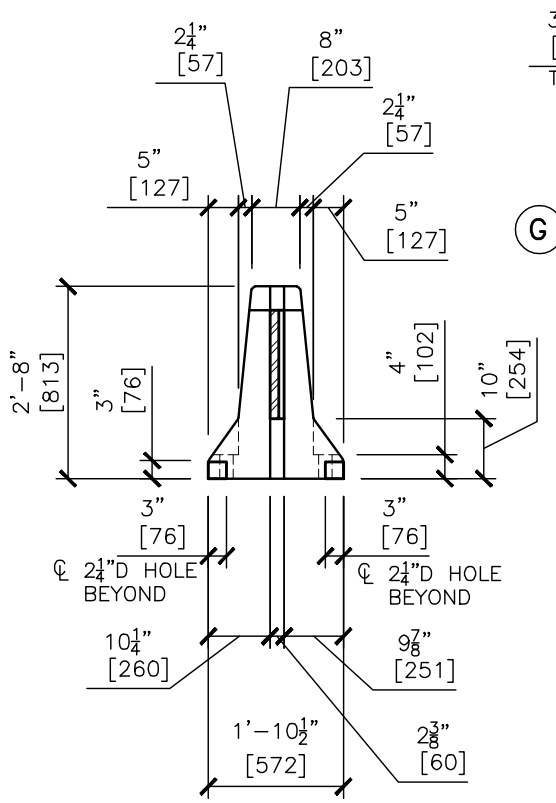

END VIEW

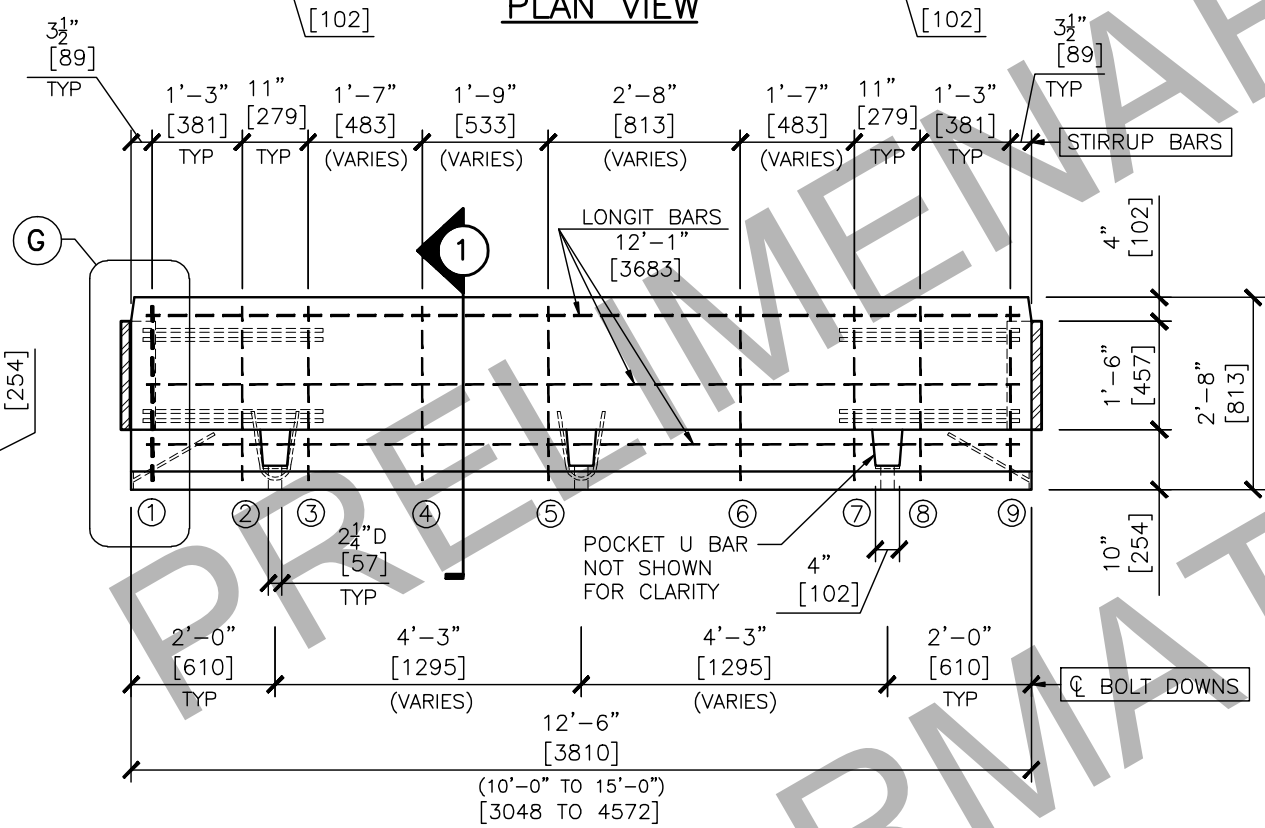

ELEVATION
12'–6" DETAIL SHOWN

NOTE:
⅛" DRAFT FOR RELEASE ON POCKETS

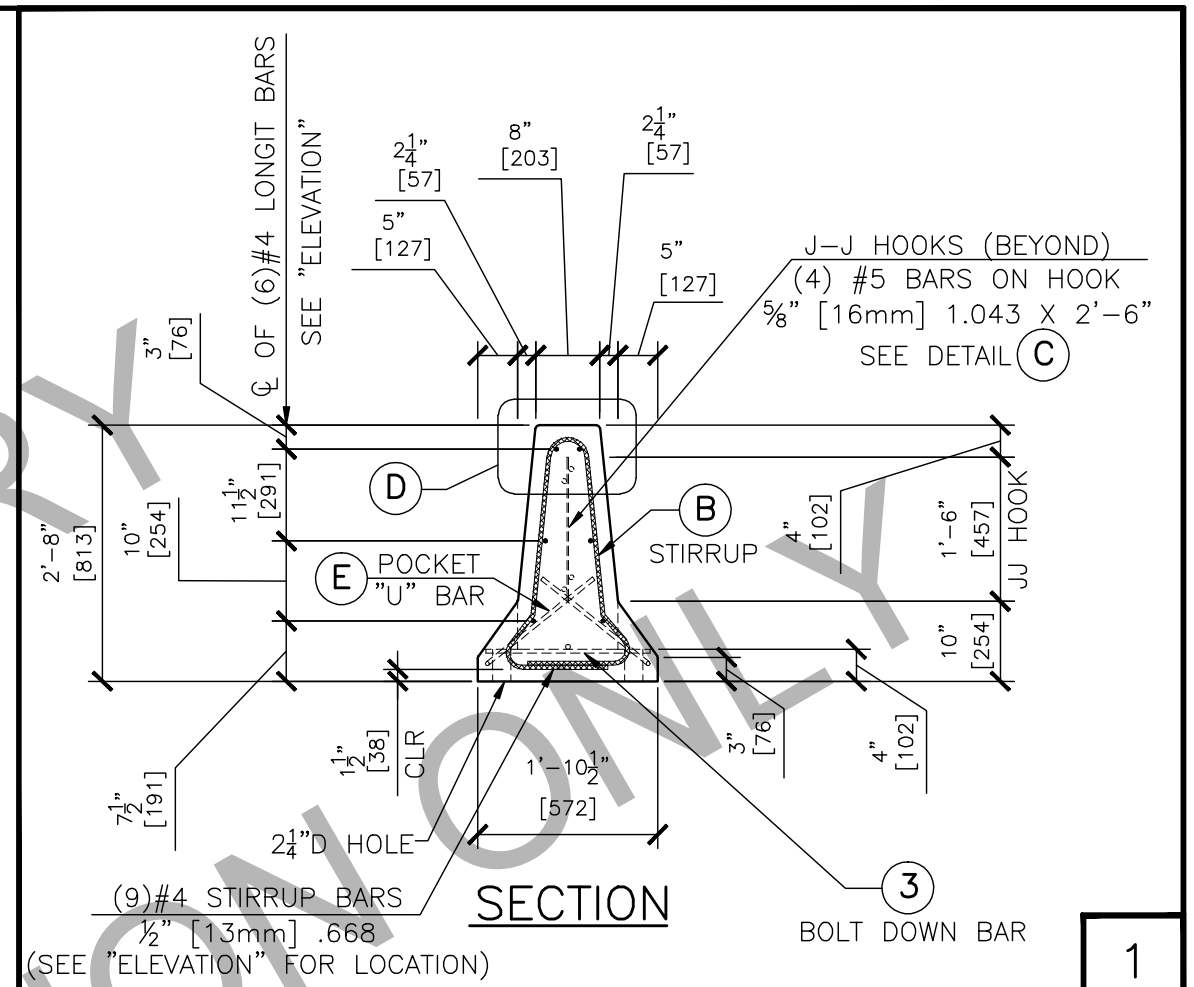

SECTION

1

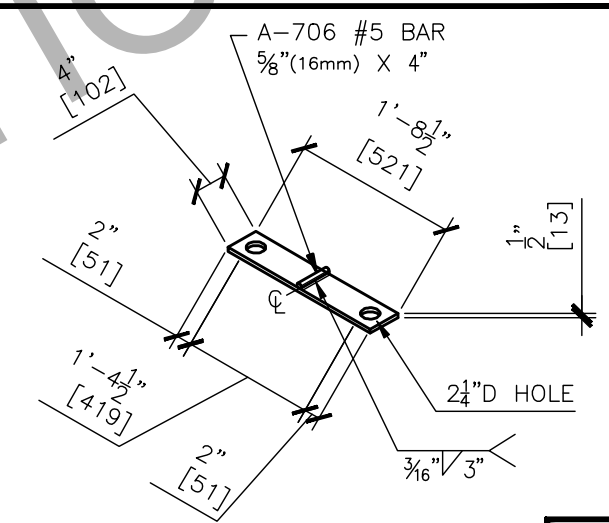

BOLT DOWN BAR

3

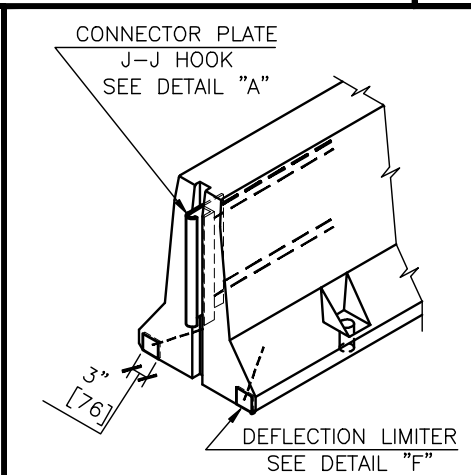

ISOMETRIC

2

GENERAL NOTES AND SPECIFICATIONS:

MATERIALS:

CONCRETE: CLASS AA CONCRETE 4000 PSI (34 MPa) MINIMUM COMPRESSIVE STRENGTH IN 28 DAYS.

REINFORCING: ASTM A–706 (A–706M) GRADE 60. REBARS WELDED TO STEEL CONNECTOR PLATES. ALL REINFORCING STEEL WILL BE GRADE 60, UNLESS OTHERWISE SPECIFIED. ALL WELDED REBAR IS ASTM A706. PRODUCERS OPTION USE OF LIFTING DEVICES, CHAIRS, SPACERS, OR MISCELLANEOUS REBAR TO SECURE CAGE IN FORM & HANDLING

STEEL: ASTM A–36 (A–36M) (PLAIN/ MILL FINISH).

TOLERANCES:

CONNECTOR LOCATION +/– 1/16" (1.6mm)
WIDTH OF CONNECTOR @ B + 1/32" (0.8mm)
CONNECTOR PLATE SIZE + 1/8" (3.2mm)
BARRIER LENGTH + 1/4" (6.4mm)
Min 3/4" Steel Cover

DESIGN:

FHWA–APPROVED F SHAPE, JERSEY SHAPE AND CONSTANT SLOPE, JJ HOOKS IS ACCEPTED BY FHWA AS A CRASH TESTED AND OPERATIONAL DESIGN FOR USE ON ALL FEDERAL–AID HIGHWAY PROJECTS.

NOTES:

1. THE BARRIER SHALL BE CAST IN STEEL FORMS WITH STANDARD WEIGHT AGGREGATE AND HAVE AN ENTRAINED AIR CONTENT OF 5.0 TO 9.0%. CURING AND REPAIRS SHALL MEET THE REQUIREMENTS OF SECTION 704–05.

2. ALL WELDING SHALL MEET THE REQUIREMENTS OF THE STEEL CONSTRUCTION MANUAL USING AN APPROVED WELDING PROCEDURE SPECIFICATION.

3. ALL WELDING SHALL BE PERFORMED BY A WELDER QUALIFIED IN ACCORDANCE WITH SECTION 8 OF THE NYS STEEL CONSTRUCTION MANUAL.

4. SURFACES TO BE WELDED SHALL BE FREE OF SLAG, RUST, MOISTURE, GREASE, OR ANY OTHER MATERIAL THAT WILL PREVENT PROPER WELDING OR PRODUCE OBJECTIONABLE FUMES.

5. A MINIMUM OF TWO (2) RECESSED LIFTING DEVICES SHALL BE INSTALLED ON EACH SEGMENT.

6. ANCHORING, WHEN REQUIRED, SHALL BE AS SHOWN ON THE CURRENT DEPARTMENT STANDARD SHEET FOR TEMPORARY CONCRETE BARRIER.

"NOTICE: This product contains proprietary features which are protected by one or more U.S. patents."

REVISIONS	
9	
8	
7	
6	
5	
4	
3	
2	
1	
00	
0	

EASI–SET WORLDWIDE
6119 CATLETT ROAD
MIDLAND, VA 22728
SUPPLIER
Contact: Rich Grove, Ext. 129
PHONE: 540–439–2011
FAX: 540–439–2541

APPROVED PLANT
MANUFACTURER

J–J HOOKS TEMP. CONC. BARRIER BOLTED & PINNED

Ref. No. MB–1015
Last Rev. xx/xx/xx

DWG No. 7505–1 JOB No. —

DRAWN BY:	MCG	DATE: 12–10–12	SHEET
CHECKED BY:	RHG	DATE: 12–10–12	1/2
APPROVED BY:	R.SMITH	DATE: 12–10–12	

PRELIMINARY FOR INFORMATION ONLY

Copyright © 2012 EASI SET INDUSTRIES. All Rights Reserved. This information is proprietary to Easi–Set industries and the information contained herein is not to be transmitted to any other organization unless specifically authorized in writing by Easi–Set Industries. Easi–Set Industries is an exclusive licensor in the United States, and the furnishing of this drawing does not constitute an express or implied license.

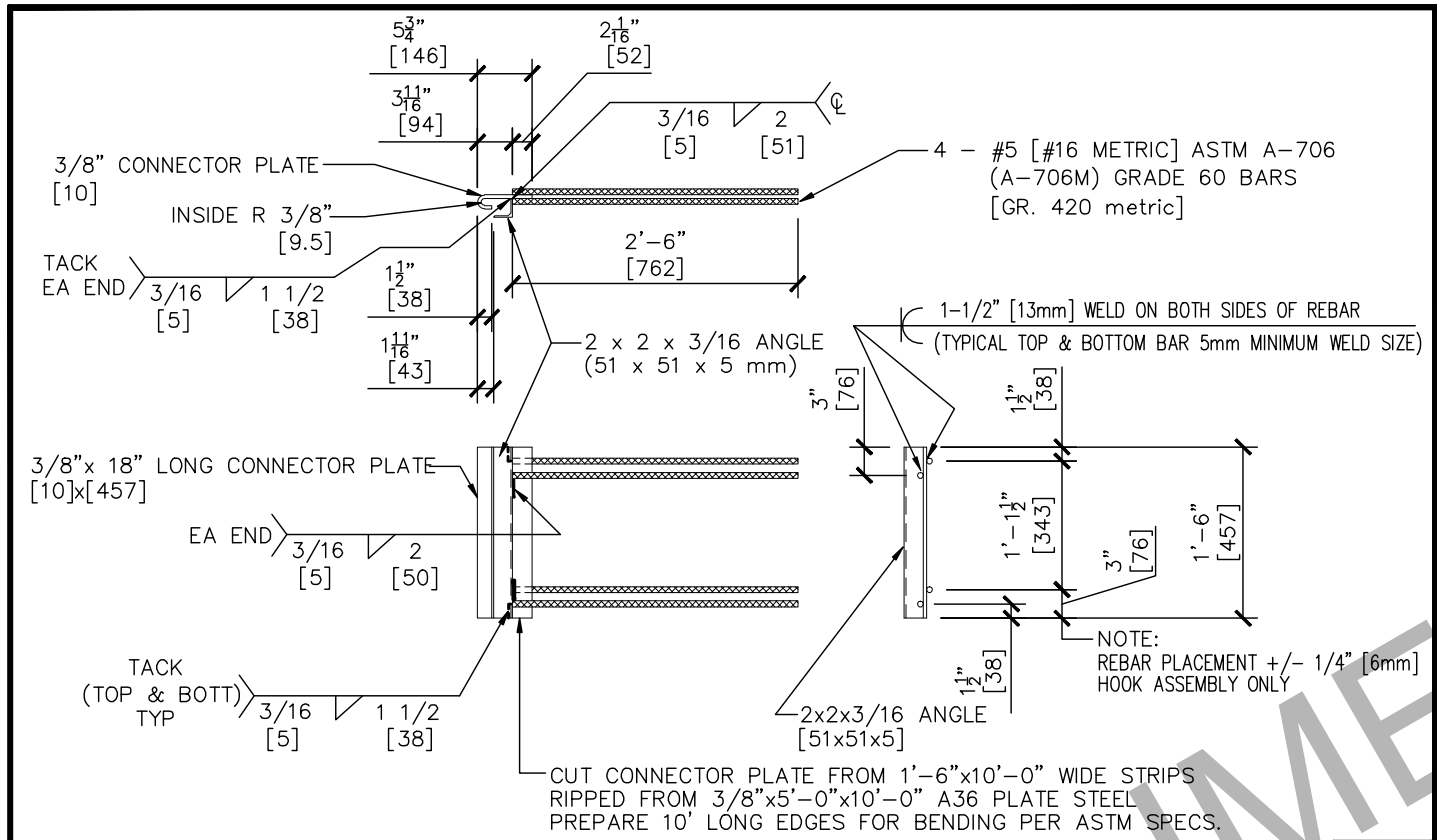

CONNECTOR PLATE DETAIL
J–J HOOK

A

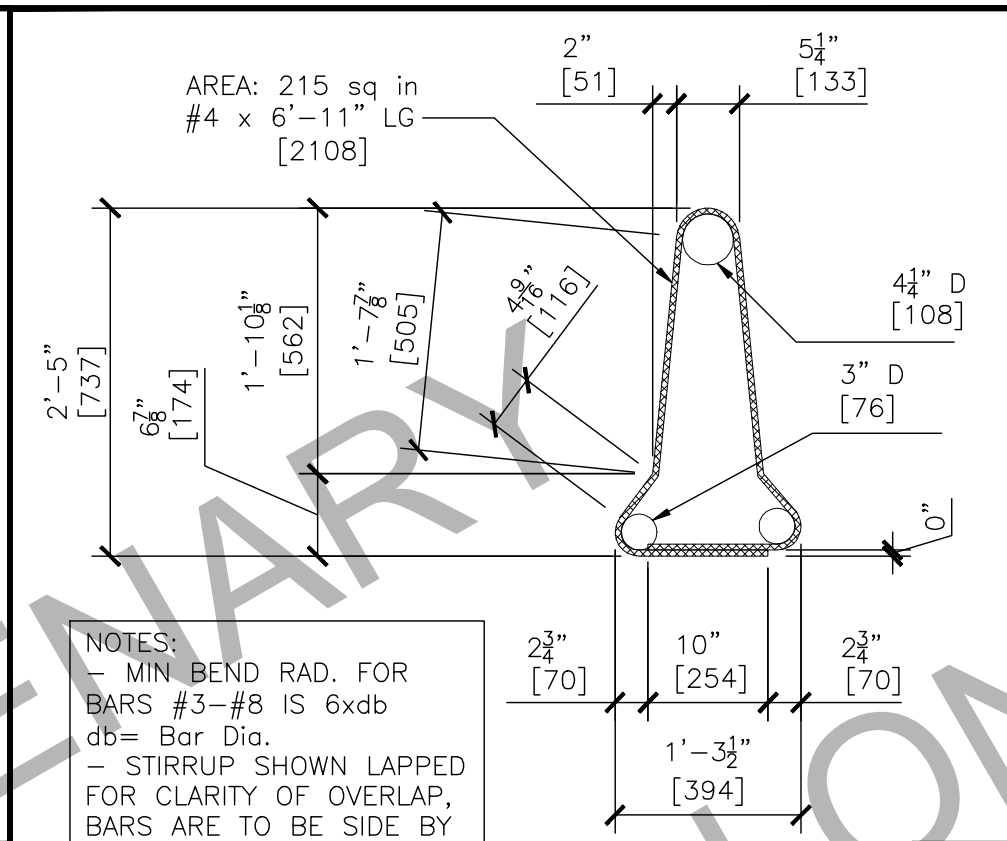

NOTES:
– MIN BEND RAD. FOR BARS #3–#8 IS 6xdb
db= Bar Dia.
– STIRRUP SHOWN LAPPED FOR CLARITY OF OVERLAP, BARS ARE TO BE SIDE BY SIDE.

STIRRUP

B

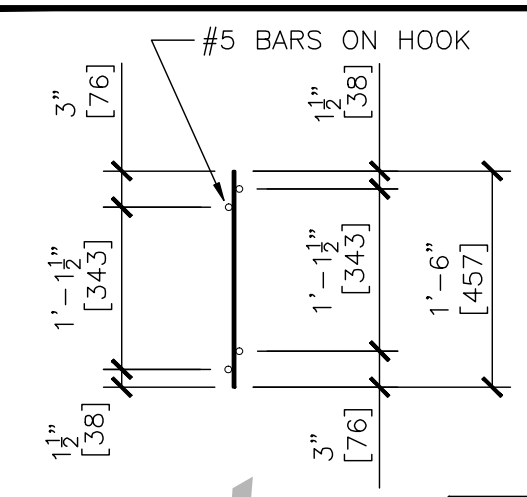

J–J HOOK
BAR LOCATION

C

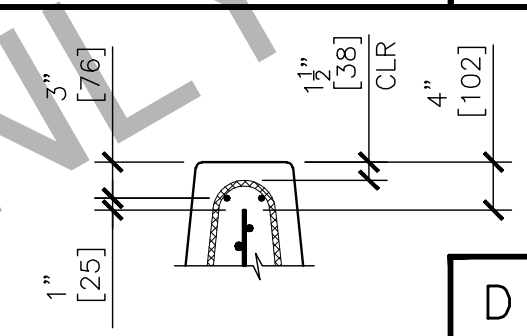

D

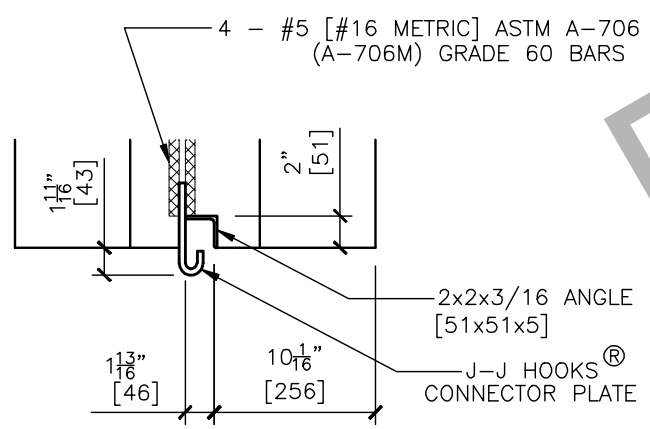

PLAN OF END

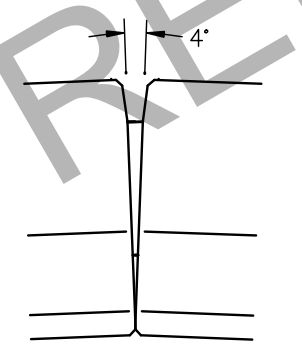

VERTICAL ROTATION
MINIMUM VERTICAL CURVE RADIUS = 175' [53.3 m]

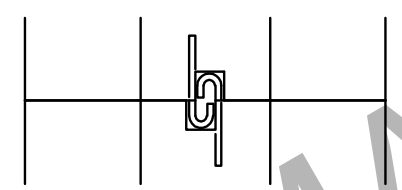

CLOSED POSITION

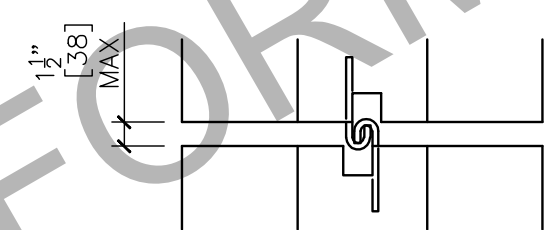

MAXIMUM SEPARATION

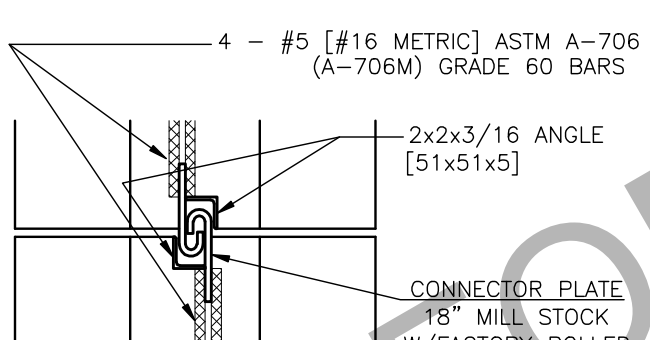

POSITIVE CONNECTOR

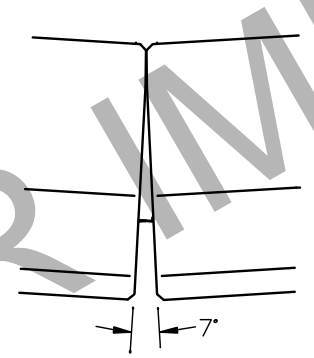

VERTICAL ROTATION
MINIMUM VERTICAL CURVE RADIUS = 100' [30.5 m]

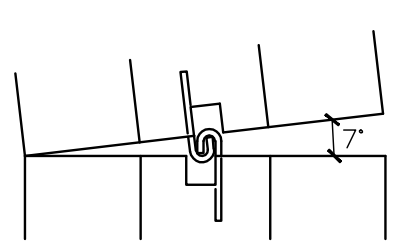

HORIZONTAL ROTATION

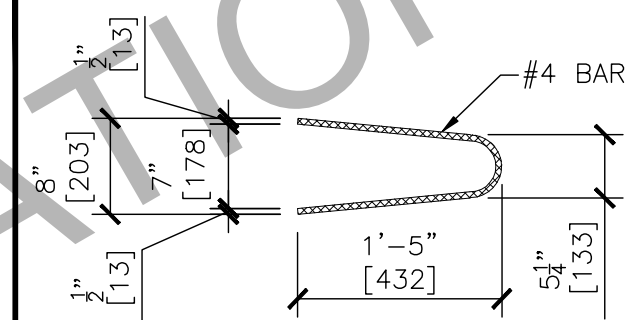

POCKET "U" BAR

E

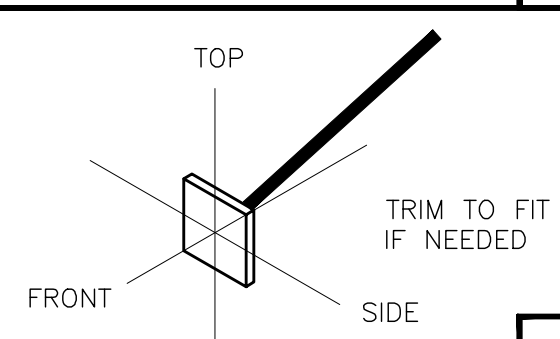

DEFLECTION LIMITER

F

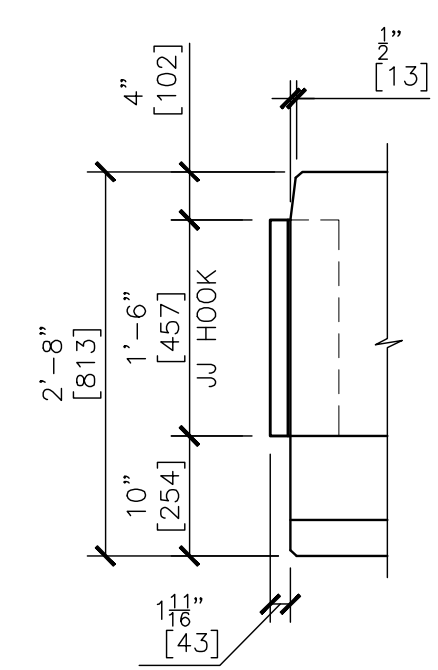

ELEVATION AT END

G

"NOTICE: This product contains proprietary features which are protected by one or more U.S. patents."

REVISIONS	
9	
8	
7	
6	
5	
4	
3	
2	
1	
00	
0	

EASI–SET WORLDWIDE Contact: Nick Grosse, Ext. 129
6110 CATLETT ROAD, MIDLANDS, VA 22729 — SUPPLIER
PHONE: 540–439–5011 FAX: 540–439–5541

APPROVED PLANT
MANUFACTURER

J–J HOOKS TEMP. CONC. BARRIER BOLTED & PINNED

Ref. No. MB–1015
Last Rev. xx/xx/xx

DWG No. 7505–1 JOB No. ——

DRAWN BY:	MCG	DATE: 12–10–12	SHEET
CHECKED BY:	RHG	DATE: 12–10–12	2/2
APPROVED BY:	R.SMITH	DATE: 12–10–12	

PRELIMINARY FOR INFORMATION ONLY

Copyright © 2012 EASI SET INDUSTRIES. All Rights Reserved. This information is proprietary to Easi–Set industries and the information contained herein is not to be transmitted to any other organization unless specifically authorized in writing by Easi–Set Industries. Easi–Set Industries is an exclusive licensor in the United States, and the furnishing of this drawing does not constitute an express or implied license.